IDEAL

KRUG+PRIESTER

Guillotines

EN Operating Instructions

IDEAL 4860
IDEAL 5260
IDEAL 6660

Table of Contents

Safety precautions 3
Intended use 4
Operating elements 5
Installation 10
Startup 12
Operation 15
Blade and cutting stick replacement 26
Maintenance and cleaning 35
Annual inspection / Safety test 36
Possible malfunctions 37
Accessories 42
Technical data 43
EC-declaration of conformity 46

Safety precautions

Please read these operating instructions before putting the machine into operation and observe the safety precautions.
The operating instructions must always be available.

Children must not operate the machine!

Do not reach beneath the blade!

Never leave the blade unattended!
Do not extract or transport the blade without protection! (See page 29 and 31).
⚠ **Danger! Risk of injury!**

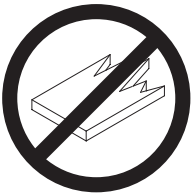

Do not cut hard materials or materials which may splinter!

Do not use any spray cans with flammable content near to the cutting machine!

Do not use any flammable cleaning agents.

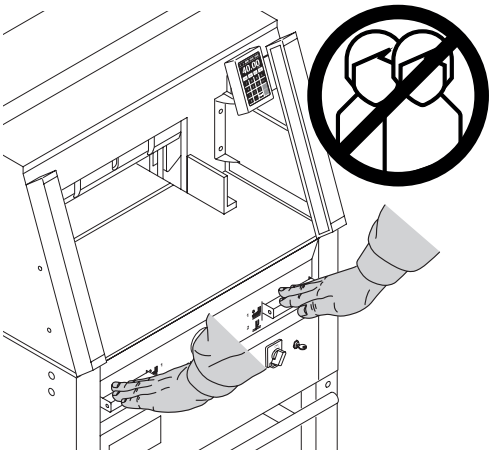

Intended use

The machine is designed for cutting stacks of paper to a specified size.
This machine is constructed for "one-man operation" only!
⚠ **Warning!** Clips or similar damage the cutting blade.

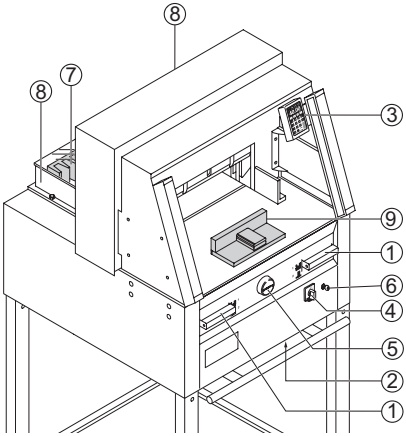

Operating elements

① Safety two-handed control system Pre-clamping and cutting
② Overload switch (blade drive/clamp drive/ backgauge drive)
③ Backgauge control
④ Main switch
⑤ Hand-wheel for backgauge setting
⑥ Key switch
⑦ Backgauge
⑧ Side lay left and right

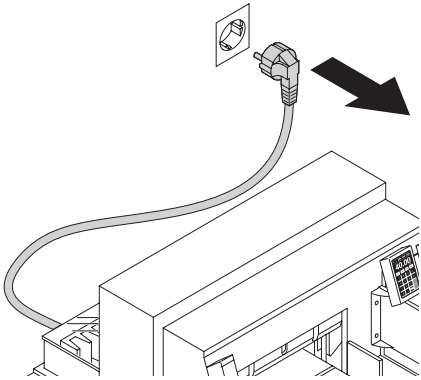

Disconnect from the mains before starting any service work or before removing the panels!

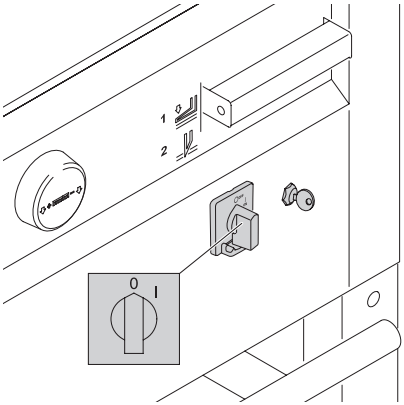

Replacement of blade and cutting stick may be performed only when the main switch is switched off!

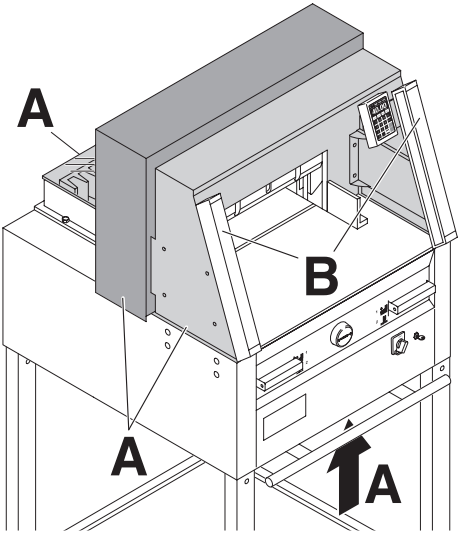

All components which could endanger the operator are covered by a guard!

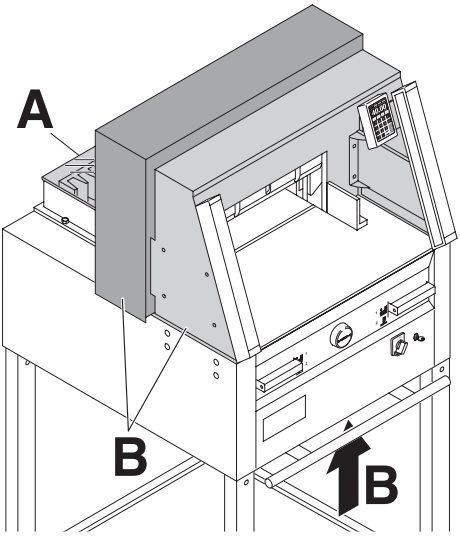

Operating the machine without safety device is forbidden!
(Rear screwed safety guard (**A**) and panel (**B**)).

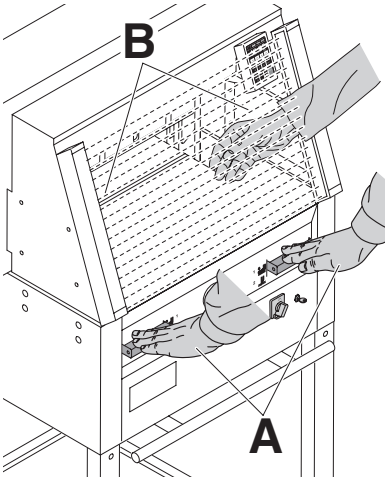

The cutting action, which is dangerous to the operator,is

- protected by a two-handed control system (**A**)
- and safety beam guard (**B**).

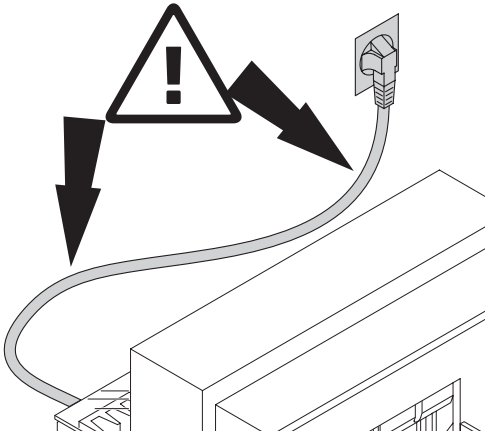

Protect mains cable against heat, oil and sharp edges!

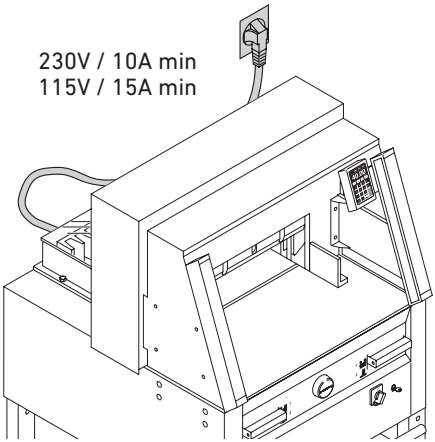

Connect the power cord to a single phase socket.

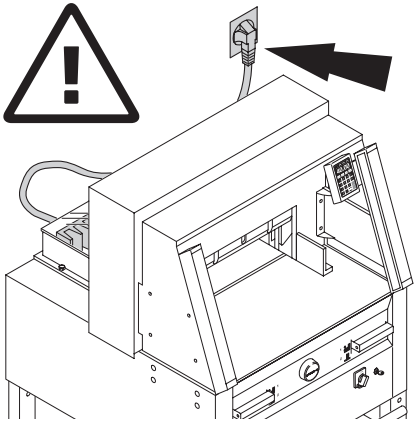

Ensure free access to mains!

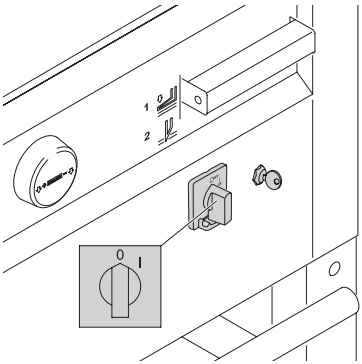

When not in use for a longer period switch off. (Main switch to "0").

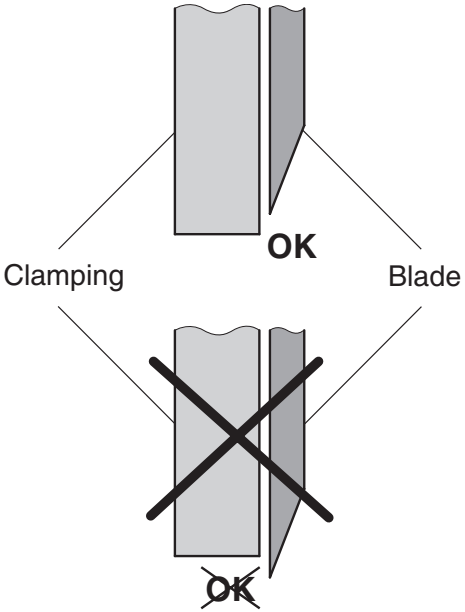

⚠ Danger!
Blade must always be covered by the pressing bar.

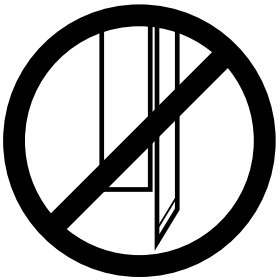

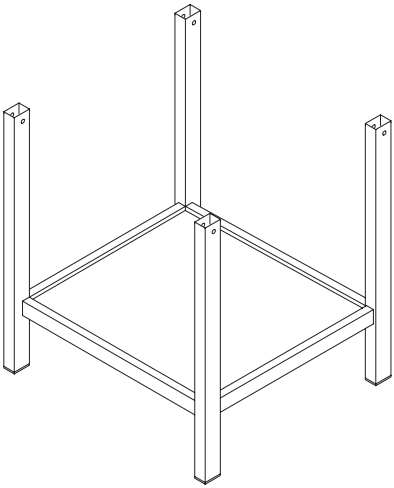

Remove the stand from the wooden pallet.

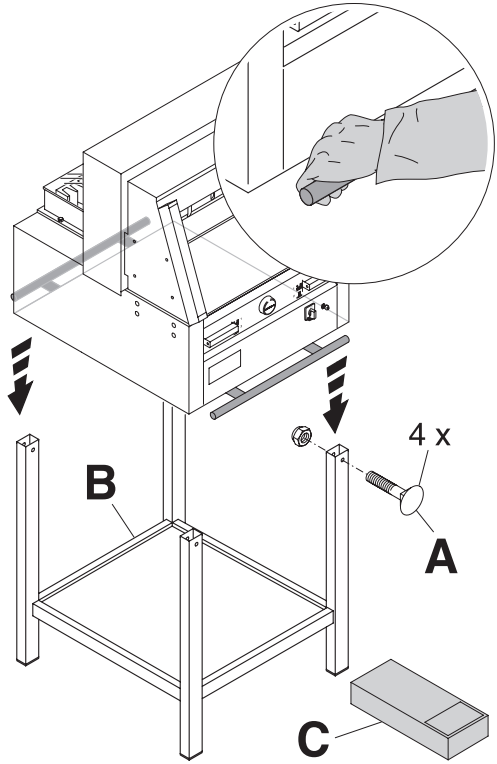

4 strong people are required to lift the machine from the pallet and place it on the stand. Secure with 4 screws (**A**). Put the shelf (**B**) on the stand. (Parts and tools are in the tool set) (**C**).

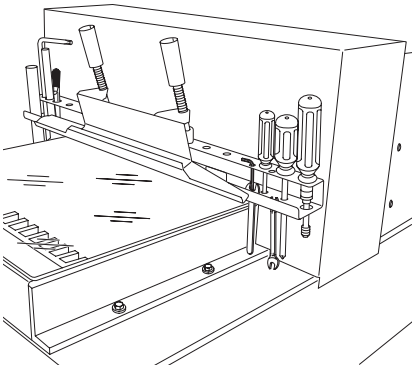

Tools can be kept in the holder provided.

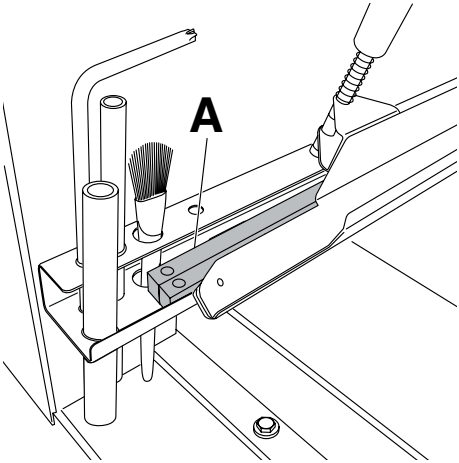

Cutting sticks (**A**) can be put in the tool holder.

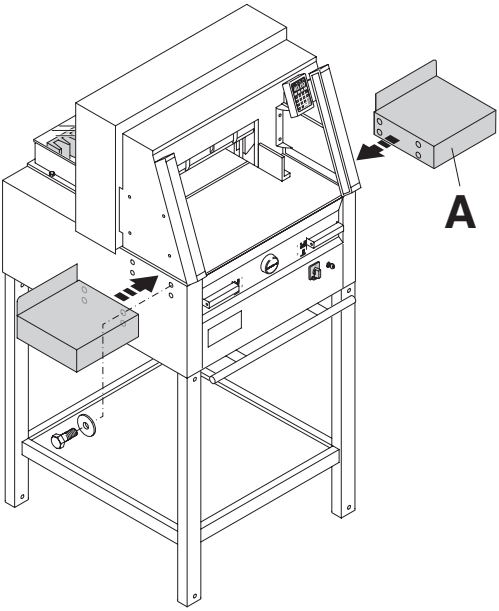

Side tables (**A**), left and right are available as an option (No. 9000 528).

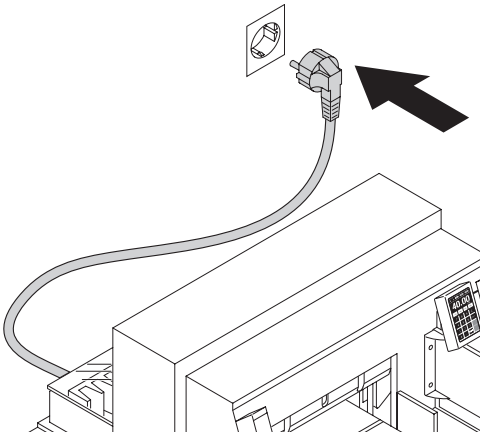

Startup

Plug into socket.
The machine must be connected directly to the socket.

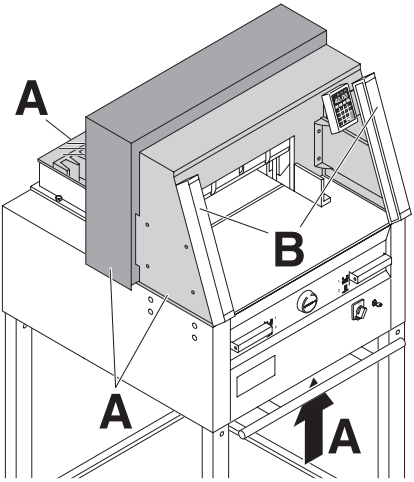

The machine may only be operated, if the operating instructions and the safety instructions have been understood. Before each use, check the safety equipment for completeness and functionality.

- All covers have to be mounted (**A**).
- Safety beam guard must be mounted (**B**).
- The release for cutting is allowed only if the two-hand safety device is operated at the same time (**C)**
- **Safety light beam:**
  If the test rod (E, tool kit) is held into the protective field (D), an activated work cycle must be stopped immediately.

We recommend you keep a record of your test results.

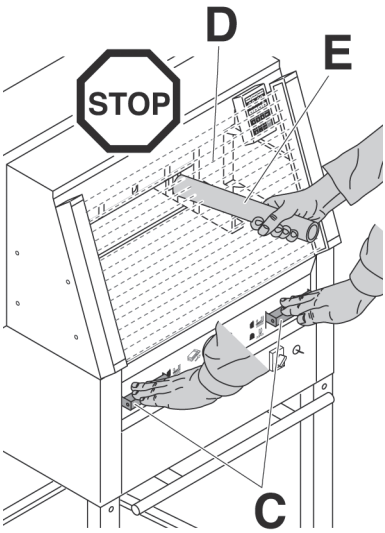

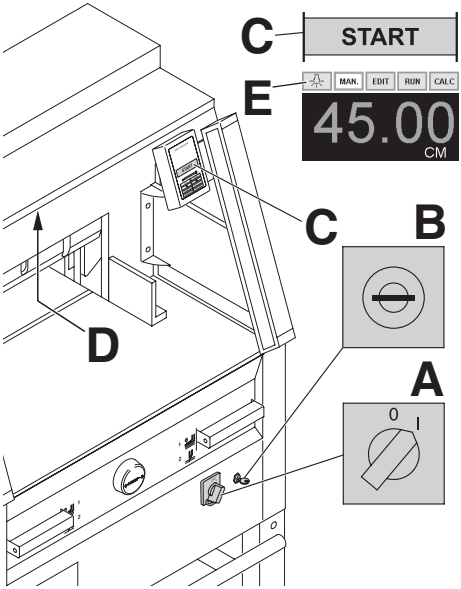

Position the main switch to "I" (**A**). Insert the key for the control system and move it to the right (**B**). The machine is now ready for use.

Press START (**C**).
Machine will automatically go to the start position.

Bright LEDs illuminate the working area (**D**).
The LED button (**E**) has 4 switching steps
Press 1 x ☼ → brightness 3
Press 2 x ☼ → brightness 2
Press 3 x ☼ → brightness 1
Press 4 x ☼ → OFF

The light can also be switched off by pressing and keeping pressed the ☼ symbol a few seconds.

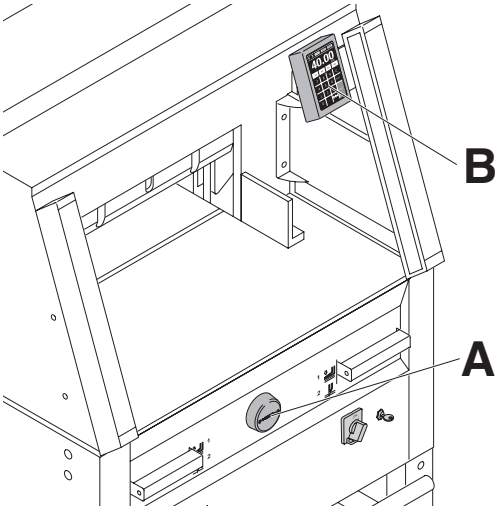

The measurement is set either with the hand-wheel (**A**) or by programming (**B**) the cutting measurements. Measurement is shown on the display in inches or cm (**B**).

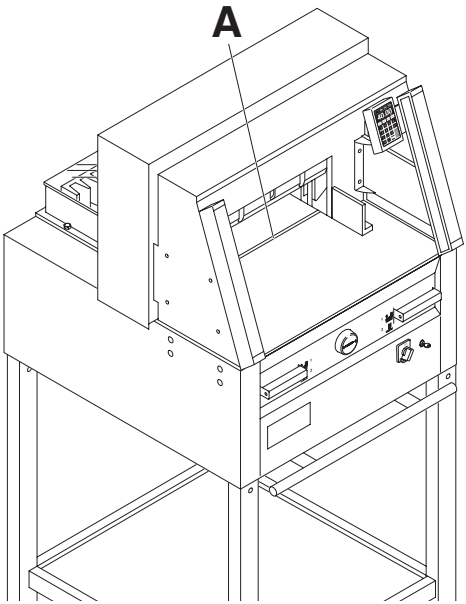

Cut is indicated by means of an optical light beam (**A**).
The blade cuts at the front edge of the light beam. Please only use this if an exact measurement is not required.

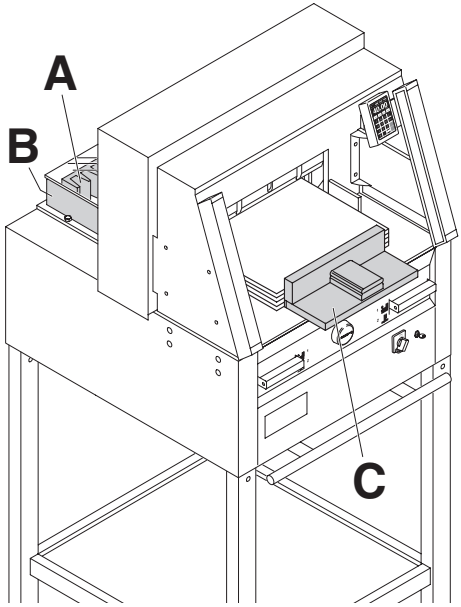

The stack of paper can be placed against the back gauge (**A**) and the left or right side stop (**B**). Use the supplied paper knock-up block (**C**) to move the stack of paper.

Note: Place the stack of paper against the back gauge using the paper knock-up block before each cut.

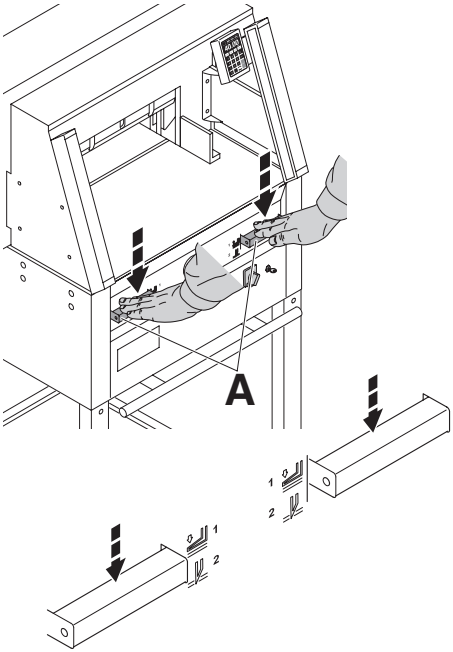

The clamp moves automatically when cutting is activated.

The paper can also be pressed in advance. Clamping and cutting is activated by the actuators (**A**) on the front table.

The actuator has 2 switching steps:
1. pre-clamping
2. automatic clamping and cutting

Switch position 1

= **Pre-clamping**
Press down both actuators to step 1

= **Clamp returns**
Press down completely one of the actuators

Switch position 2

= **Cutting sequence with automatic clamping**
Press down both actuators to step 2

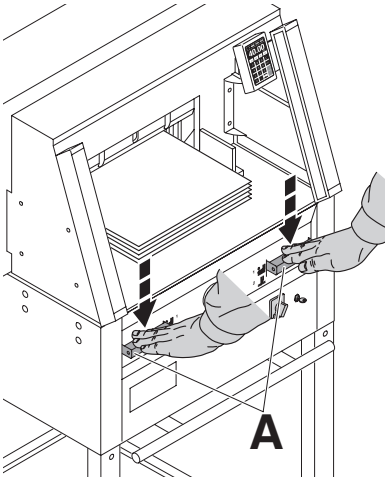

Cutting activation:
Press both actuators of the two-handed control system (**A**) simultaneously and keep pressed until the paper is completely cut.

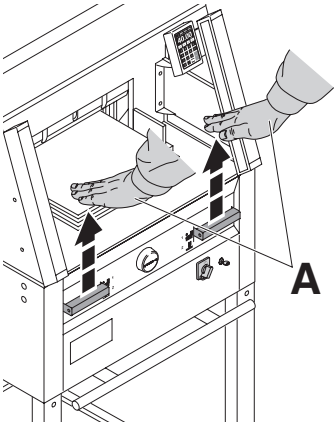

To interrupt or stop cutting:
To interrupt or stop cutting, release both actuators (**A**) of the two-handed control.

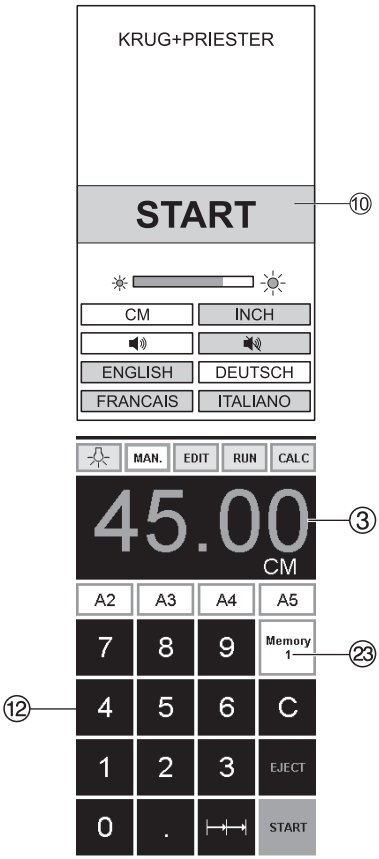

Start machine

- Main switch ④ to position "I", insert the key ⑥ for the control panel and turn to the right.
  Start screen appears
  The following functions are changeable:
  Brightness
  CM/INCH
  Touchtone ON/OFF
  Language

- Press START ⑩ → backgauge ⑦ moves to the rear and searches for the reference position, wait until a measurement is shown in the display ③
  4860 = 45.00 cm, 17.717 inches
  5260 = 52.00 cm, 20.742 inches
  6660 = 61.00 cm, 24.016 inches
- The DIN and free programmable measurements are recallable with the respective buttons ㉓.
  Memory 1: A2, A3, A4, A5,
  Memory 2: A6, A7, B3, B4
  Memory 3: [—.—] [—.—] [—.—] [—.—]
  Memory 4: [—.—] [—.—] [—.—] [—.—]
  and in inch
  Memory 1: 4¼“, 5 ½“, 7“, 8 ½“
  Memory 2: 11“, 12“, 14“, 17“
  Memory 3: [—.—] [—.—] [—.—] [—.—]
  Memory 4: [—.—] [—.—] [—.—] [—.—]
  In memory 3 + 4 (mm and inch) no measurements are saved. Until a first input of data the following will be shown in the corresponding fields: [—.—] . **The measurements entered remain stored. They cannot be deleted but overwritten.**

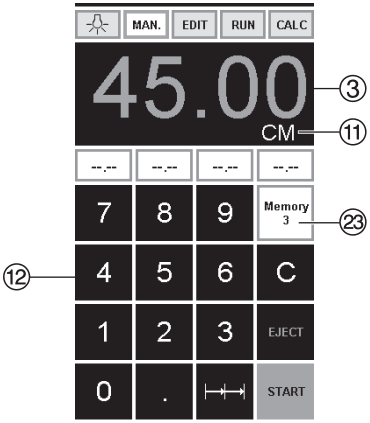

How to program Memory 3 and 4
Press the memory button ㉓ to enter the memory platform (3 or 4). Enter the required measurements or overwrite them.Press the [—,—] button and keep it pressed until an acoustic signal sounds, the measurements have been saved now.

⚠ **Warning!**
Before storing or cutting a measurement please check if the correct measurement scale (cm or inch) see above is stored.
For information on how to store see picture below left
Is shown on the screen see ⑪.

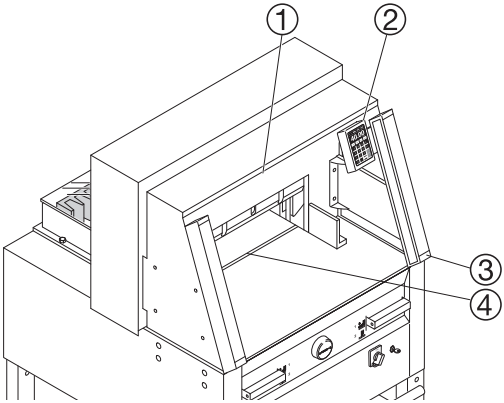

After 30 minutes the machine (① ② ③ ④) switches to energy-saving mode.
The machine is reactivated by touching the keypad area ⑫.

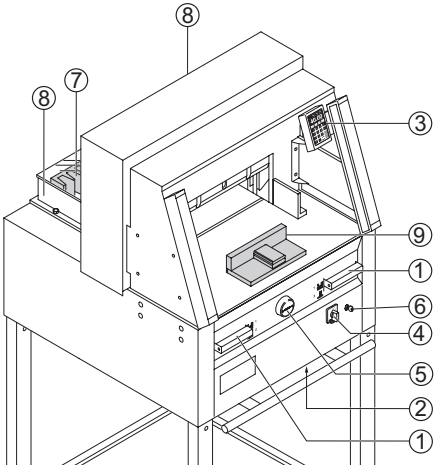

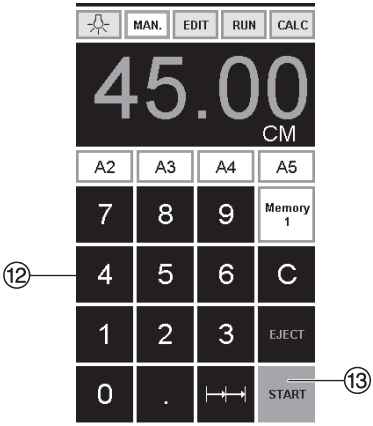

Cutting activation

⚠ **Warning!**

- Run backgauge to the front for turning the paper stack
- Do not interrupt the upward movement of the blade by performing switching procedures
- Wait until the display is green before activating a cut
- Blade must always be at the top and be covered by the clamp. Do not touch the blade (see safety information on page 38).

⚠ **Risk of injury!**

Cutting to specified dimensions

- Press MAN.
- Enter dimension on the numerical key pad ⑫
  → Measurement is shown in red
  (If a wrong dimension is entered this can be corrected by pressing the C button)
- Press START ⑬ → dimension is approached,
  → Measurement is shown in green
- Insert paper and move by means of the stacking angle ⑨ to the backgauge ⑦ and side lay on the left ⑧
- Release the cut.

Cut according to markings

- Press MAN.
- Adjust the backgauge with the hand-wheel ⑤ to the back
- Insert paper and move by means of the stacking angle ⑨ to the backgauge ⑦ and side lay on the left ⑧
- Turn the hand-wheel ⑤ to the right until the marking on the paper to be cut is below the cutting line indicator
- The further the hand-wheel ⑦ is turned to the right, the quicker the backgauge moves. If the hand-wheel is turned to the left the backgauge will return quicker.

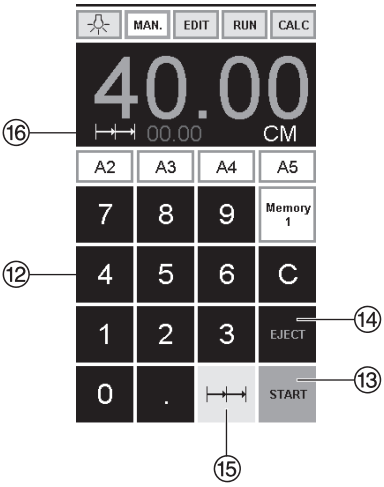

Eject function
If EJECT ⑭ is pressed instead of START ⑬, after inserting the measurement ⑫, the backgauge will advance forwards so that paper can be removed. Finally the backgauge moves to the last setting.

Multiple cut
- Enter the start dimension on the display ⑫
- Advance to the measurement with the START ⑬
- Push the paper to the backgauge ⑦
- Press multiple cut ⑮
- Multiple cut sign appears top left together with the value 00.00 ⑯
- Enter multiple cut measurement (appears in red letters)
- Press START → the backgauge advances by the multiple cut size
- This is repeated everytime a cut is activated.

Exiting program-mode
- Press multiple cut ⑮ (yellow). Multiple cut sign and value are deleted.

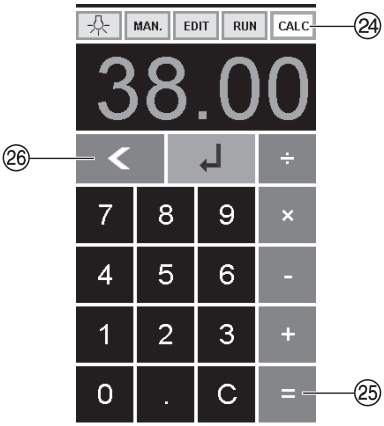

Calculator function
- Press CALC ㉔ , calculate the desired measurement, e.g. 40 - 2 ㉕ → ↵ and the backgauge advances immediately to 38.
- With the key ㉖ can be changed to manual mode MAN. at any time.

Programming
This control system enables you to store 99 programs with 99 programmable steps. One step represents one measurement. After entering the program numbers you are able to change between several program steps with the button ▼ and ▲.
First figure on display ⑰ = program number. Second figure on display ⑱ = program step. **Smallest cutting measurement:**
4860 3.50 cm / 1.378 inch
5260 3.50 cm / 1.378 inch
6660 2.50 cm / 0.984 inch

Each program step corresponds to one dimension. The indicated program step can be overwritten at any time. These programs remain stored when the machine is off.

Entering a program
- Press EDIT → "Load program no." appears
- Enter program number 01 ... 99, with ↵ (Top number ⑰ on display = program number)
- If measurement is shown on the display the program is reserved, select another program
- Program step "01 Step" 00.00 ⑱ appears. (Second figure on display ⑱ = program step.
- Enter dimension, or move the backgauge to the desired measurement with the hand-wheel ⑤
- Store the measurement ↵,next program step appears.
- Enter the next measurement and with Enter ↵ store the measurement etc.
- Should the entered program be required immediately → press RUN
- Press Enter ↵
- Press START
- Escape the program mode press MAN.

Cancel a program
- Press EDIT
- Scroll with PRG until "Delete program no." appears
- Enter Program number
- Press Enter ↵
- Press Enter ↵.

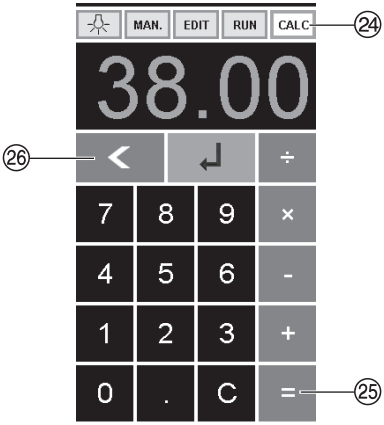

Calculator function in programming

- Press EDIT
- Enter program number
- Enter the 1st program step e.g. start-up measurement 40 cm
- Store the measurement with enter ↵
- Press CALC ㉔ , calculate the desired measurement e.g. 40 - 2 ⊟ ㉕ → ↵, the calculated measurement 38 ㉗ flashes.
- Pressing the Enter-key ↵ again, the calculated measurement is saved in the corresponding step.
- With the key < it can be changed to programming EDIT at any time.

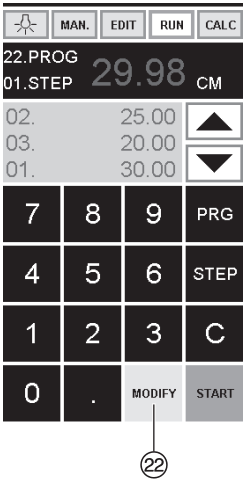

Adapting a program when the printer's imprint deviates

- Press RUN → "Load program no." appears
- Enter program number 01 ... 99, and with 2 x Enter ↵ proceed to Step 1
- Correct the cutting position of the backgauge with the hand-wheel
- MODIFY ㉒ appears on the screen and the measurement flashes
- To store press MODIFY
- Release a cut and turn the paper
- If the printer's imprint deviates it can be corrected during the first two cuts via the hand-wheel – see above
- Correction is only possible during the first two cuts
- After leaving the RUN mode the original data is stored again.

Delete a step

- Press EDIT
- Enter program number, confirm with Enter ↵
- Select program step with the arrow keys ▲ and ▼
- Scroll with STEP until "Delete step no." appears, Press 2 x Enter ↵.

Insert a step

- Press EDIT
- Select a program, confirm with Enter ↵
- Scroll with STEP until "Insert step no." appears
- Enter insert position e.g. 02
- Confirm with Enter ↵
- Enter a measurement
- Store the measurement with ↵
- The cutting position can be shown on the screen with the arrow keys ▲ and ▼.

Changing a program step

- Press EDIT
- Select a program, confirm with Enter ↵
- Scroll with STEP until "Load step no." appears
- Enter step position e.g. 03
- Confirm with Enter ↵
- Enter a new measurement, Store the measurement with ↵.

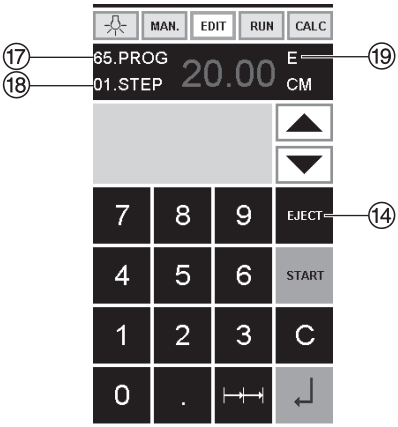

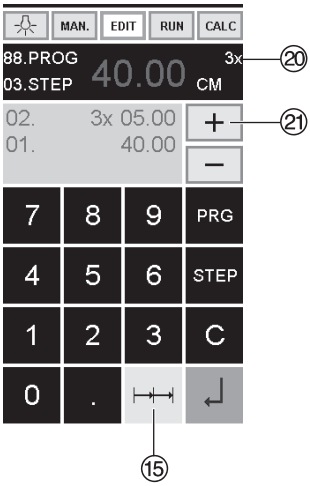

Eject function program

- If a short measurement e.g. 30 cm and then a long measurement e.g. 40 cm is cut at the start of a program then it is wise to insert an EJECT ⑲ after the first cut so that the paper is pushed to the front.
- The EJECT function can be added each time a measurement is entered and ejects before advancing to the next measurement. When the eject function is programmed an "E" ⑲ appears top right in the display.
- Inserting an Eject function subsequently in the program. Select a program and advance to the step to be changed with the arrow keys ▲ and ▼ Enter the new measurement and before activating the enter button ↵ press EJECT ⑭ .

Example of a program eject function

- Press EDIT
- Enter program number e.g. 08
- Press Enter ↵
- 1. Enter program Step e.g. 30 cm
- Press Enter ↵
- 2. Enter program Step e.g. 40 cm
  Press EJECT and with Enter ↵ store the dimension.

How the example works

- Press RUN
- Enter program number 08
- Press Enter ↵,
- Press START , Measurement is approached
- Insert paper
- Release cut 1
- Eject (Ejection is completed, turn the paper)
- The backgauge moves to program step 2
- Release cut 2

Multiple cut program

- Press EDIT
- Enter program number
- Enter the 1. program step e.g. start-up measurement 40 cm
- Store the measurement with Enter ↵
- Press the multiple cut symbol ⮕⮕ ⑮
- Enter the number of cuts ⑳ with the + button ㉑ (max. 15 cuts) followed by the multiple cut size (cutting width).
- Store with Enter ↵.

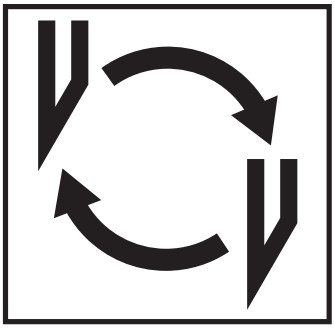

If the cutting quality decreases:

- Check the cutting depth (see page 38).
- Check the cutting stick (see page 34).
- Replace or grind the blade (see page 30 - 38).
  The blade cannot be ground if the blade height is less than 83 mm / 3,29 inches.
  A new blade must be used.
  The blade may only be ground by a qualified supplier or from the manufacturer Krug & Priester, D-72336 Balingen.

⚠ **Danger! Risk of injury!**
The blade is extremely sharp. Do not extract or transport the blade without protection. Changing the blade may only be performed by trained staff.

Blade and cutting stick replacement

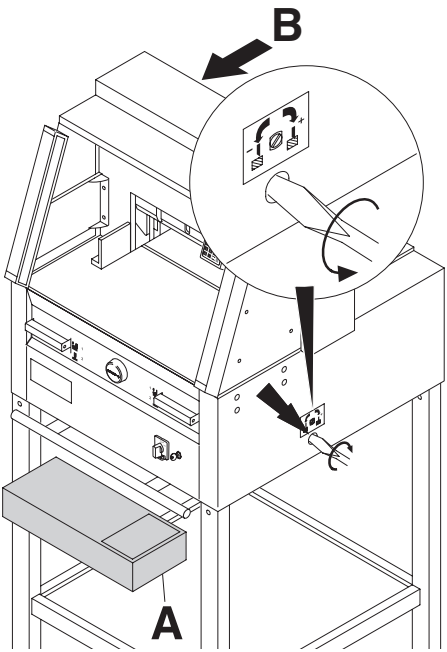

Turn the blade depth adjustment screw to the left until it stops. (Screwdriver found in tool set (**A**)) or tool holder (**B**).

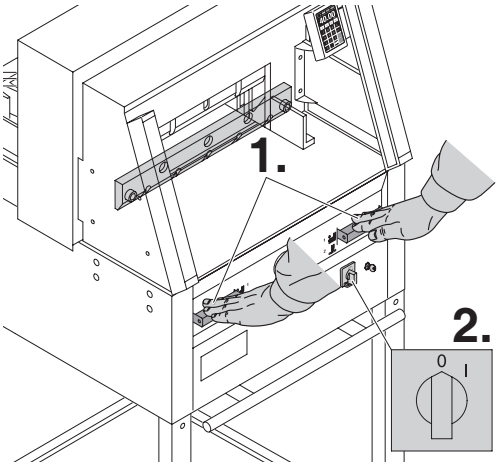

Lower the blade by pressing both cutting actuators (**1.**). Keep one actuator pressed and turn off the main switch (**2.**).

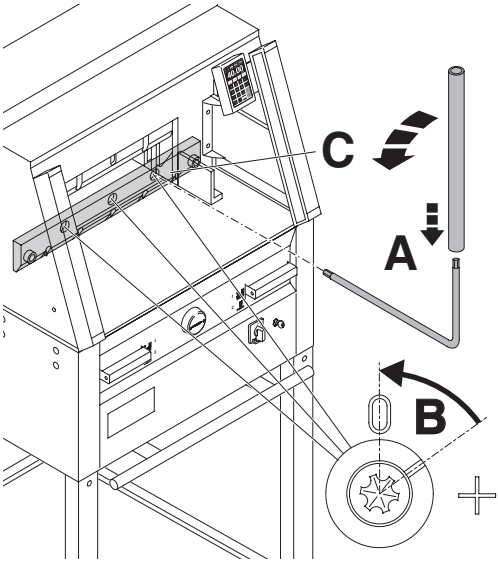

The 3 eccentrics are now exposed and should be turned counter clockwise to position "0" with the special wrench and attachable extension pipe (**A)** (in the tool set). The slot must correspond to position "0" (**B**).

Only 4860
Unscrew the blade screws (**C**) on the right hand side.

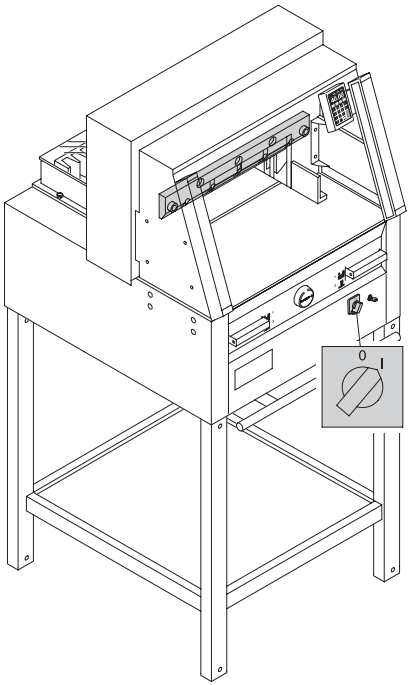

Remove the special wrench and turn on the main switch until the blade returns to the home position.

Blade and cutting stick replacement

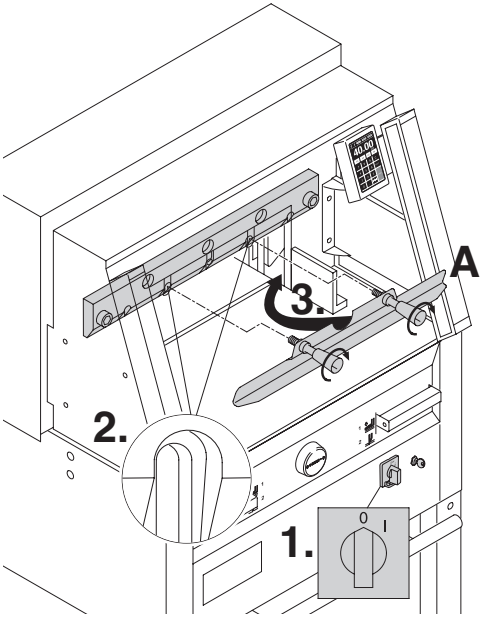

Position the main switch to "0" (**1.**)
Remove the 2 blade screws on the elongated holes (**2.**). Then put the blade changing tool (**A**) into place and fasten it to the blade (**3.**).

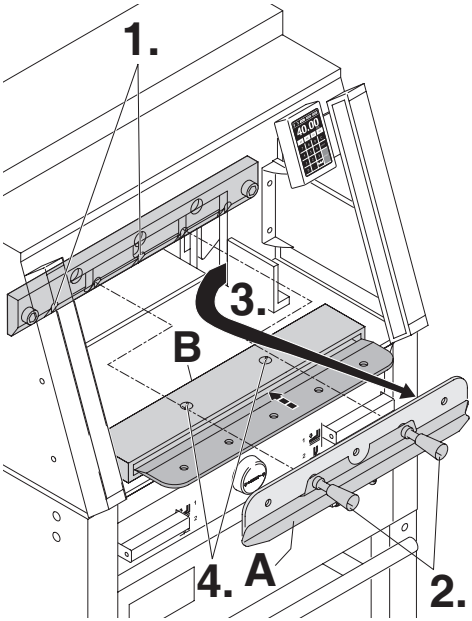

Remove 2 blade screws 4860 and 3 blade screws 5260, 6660 (**1.**).
Loosen the grips (**2.**) of the blade changing tool (**A**) lightly and allow the blade to be taken downwards out of the machine (**3.**). Place the blade into the blade carrier (**B**) and screw it into place (**4**).

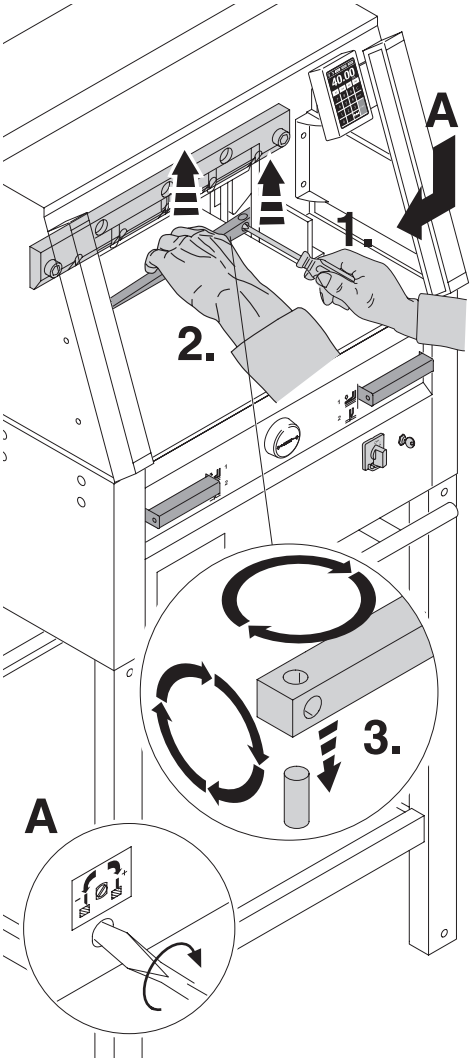

Take out the cutting stick with a small screwdriver. If needed the cutting stick can be turned or exchanged. (The cutting stick can be used eight times).

Replacing the cutting stick (not the blade).

- Turn the blade adjusting screw (**A**) to the left until it stops. (Otherwise the first cut will be too deep).
- Remove the cutting stick according to top picure.
- Turn the cutting stick (the non-used side must be near to the blade) and plug it into the holding bolt.

⚠ **Danger! Risk of injury!**

Cutting test after replacing the cutting stick (not the blade)

- Insert the paper and release the cut.
- If the last sheet of paper is not cut along the entire length turn the blade adjusting screw (**A**) ¼ turn to the right.
- If the last sheet is still not completely cut repeat this process until the last sheet is cut along the entire length.

Blade and cutting stick replacement

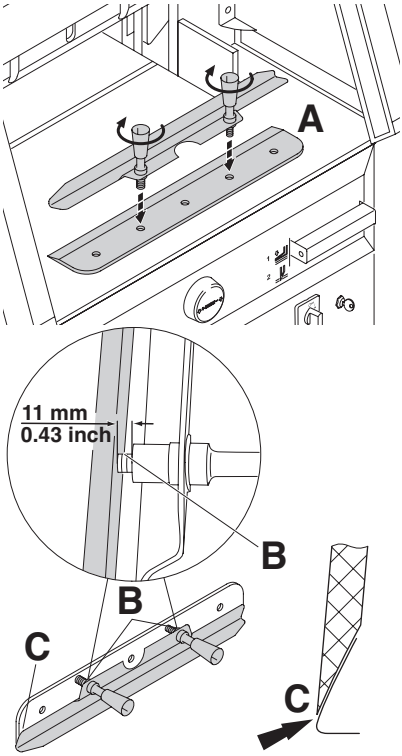

Take the exchange blade carefully out of the blade box and screw it to the blade changing tool (**A**).

- Make sure there is a space ot 11 mm or 0.43 inches! (**B**).
- Blade must be covered! (**C**).

⚠ **Danger! Risk of injury!**

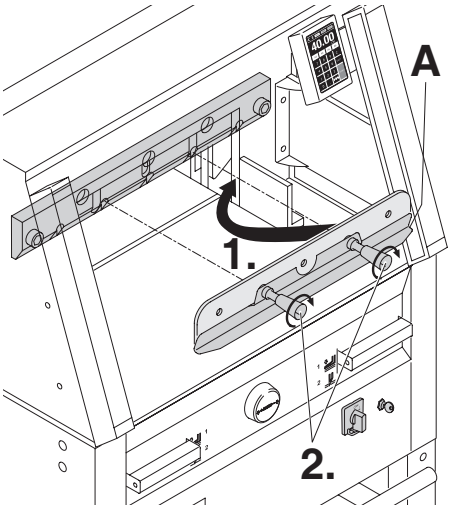

Place the blade to be exchanged with the blade changing tool (**A**) mounted (**1.**), into the blade carrier and push it up to the top and screw it into place with the grips (**2.**).

Blade and cutting stick replacement

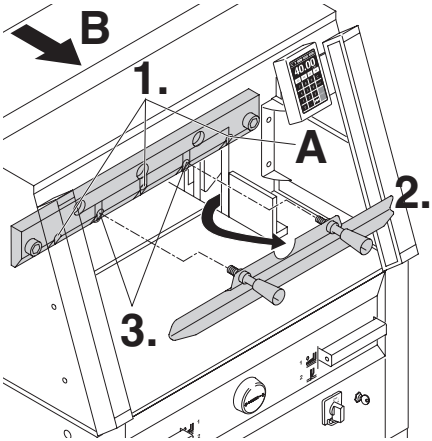

Lightly tighten 3 (4860 has 2) of the 5 blade screws (**1.**).
Remove the blade changing tool (**2.**).
Lightly tighten the remaining blade screws (**3.**).
Return blade changing tool to tool holder (**B**).

Only 4860
Lightly screw in the right blade screw (**A**) when the blade is lowered.

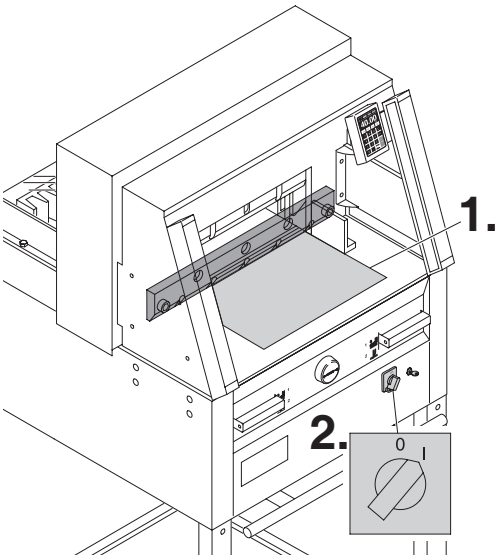

Remove all tools and distribute paper along the entire cutting length (**1.**).
Turn main switch to position "I" (**2.**).

Blade and cutting stick replacement

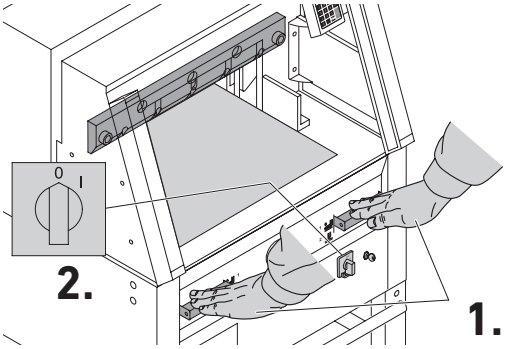

Lower the blade by pressing both cutting buttons (**1.**). Keep one button pressed and turn off the main switch (**2.**).

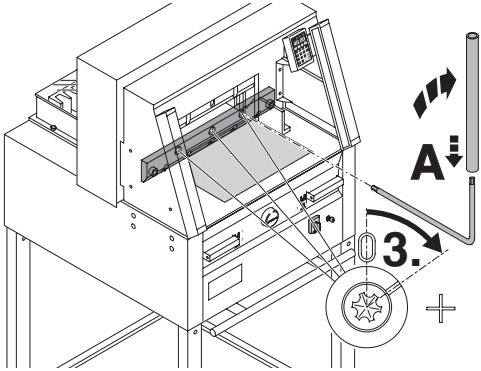

With the special wrench (**A)** the 3 eccentrics should be screwed down (**3.**)until the paper is cut along the entire length of the blade
(The blade must remain parallel, not too deep into cutting stick).

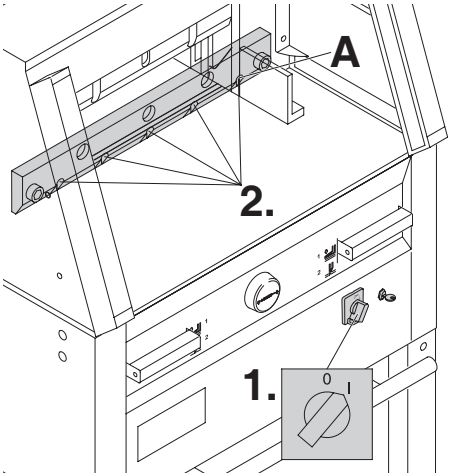

Only 4860
Tighten the blade screws (**A**) on the right hand side.

Turn main switch to position "I" (**1.**). Blade will return to upper position. Tighten the blade screws (**2.**) firmly.

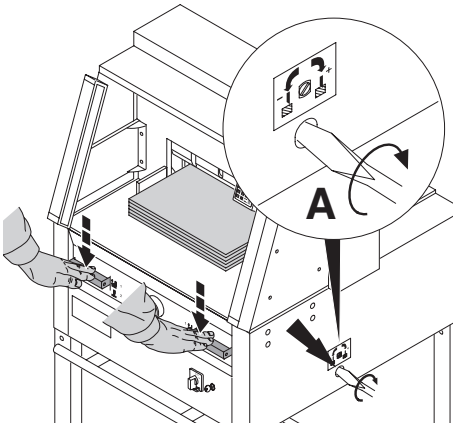

Paper cutting test. If the last sheet or several sheets are not completely cut, gradually turn the knob for blade depth adjustment (**A**) ¼ turn to the right until the paper is cut along the entire length. Do not set too low as blade will become blunt sooner.

⚠ Danger by blade replacement!
Blade must always be covered by the pressing bar (see picture below at the left).

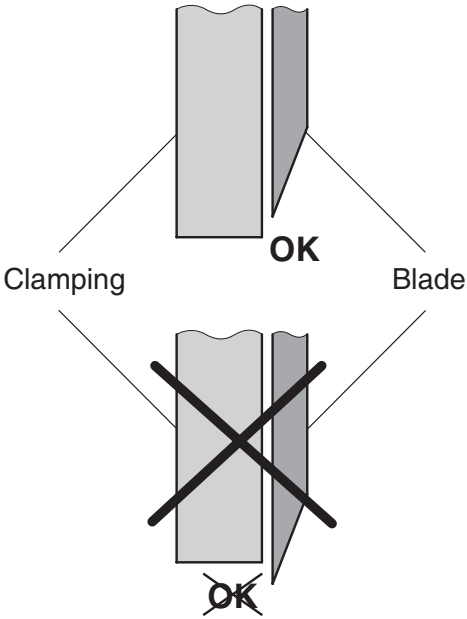

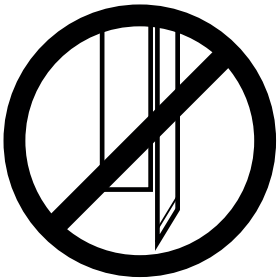

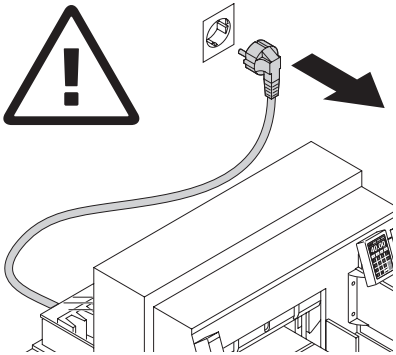

⚠ Danger! Disconnect the mains before starting any service work or before removing the cover.

Maintenance work may only be performed by trained staff.

Grease the backgauge (**A**) control weekly with a grease gun (use special grease for cutting machines). Advance the backgauge as far as possible to the front.
Grease the remaining parts twice a year (see picture).
The main switch must be on "0" (**B**).
Remove lower panel (**C**).
Tools in tool set or tool holder.

- Remove any paper.
- Grease the machine.
- Check the 4 joining bolts and 2 pushing bars for wear (**D**). If necessary inform your service personnel.
- Mount the machine.

With more than 5 hours of use per day, the service must be performed more often.

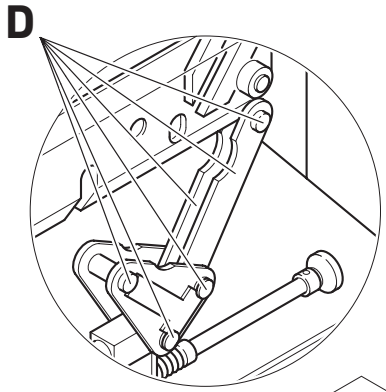

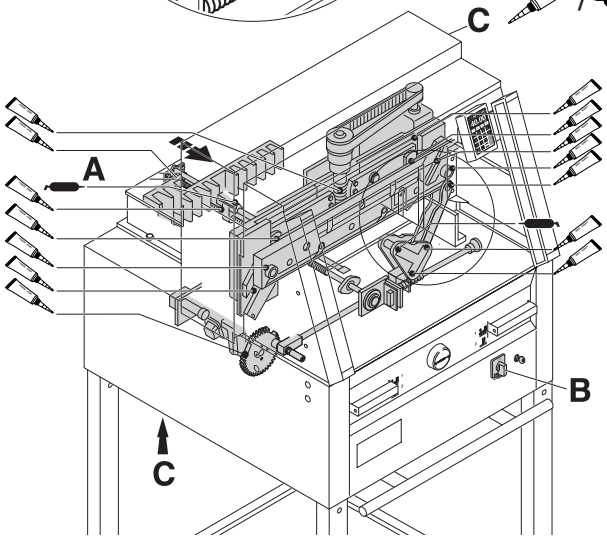

= **Greasing points on the machine.**

No. 9000 625

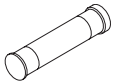

No. 9800 933

No. 9001 828

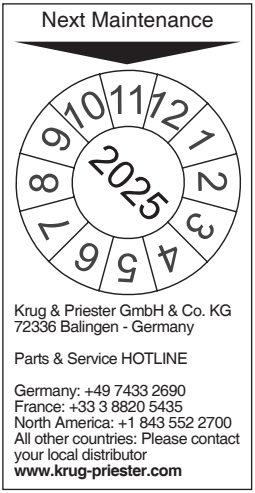

Annual inspection
To maintain the operational safety and to prevent premature wear, we recommend an annual inspection and maintenance of the machine by a qualified service technician.

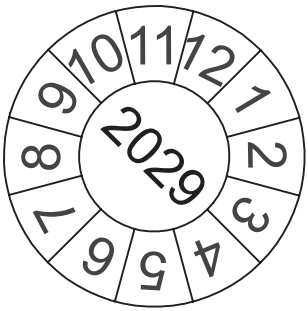

Safety test
The safety regulations are according to the regulations of the country where the cutting machine is operated. The manufacturer recommends a safety check is made every 5 years by an authorised service team.

Machine does not function!

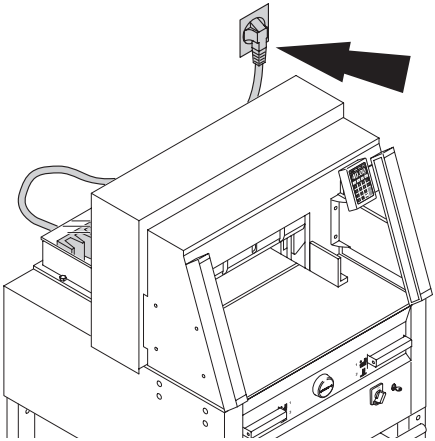

Is the machine plugged in?

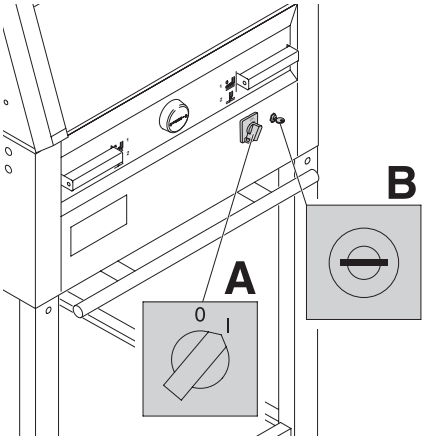

Main switch to position "I"? (**A**)
Control system activated? (**B**)
(Turn key to the right)
Release a cut see page 21.

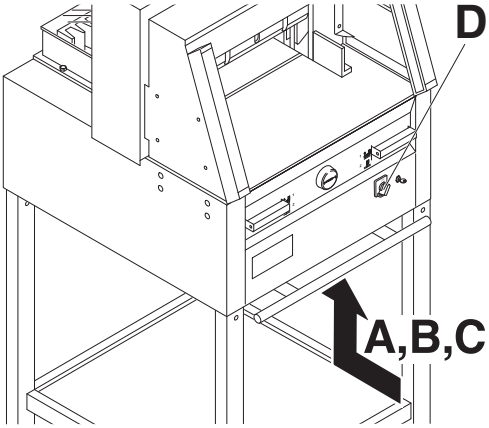

Machine turns off:

- Machine overloaded.
  Safety button (**A**) or (**B**) ejects.
  (Allow 1 minute cooling time and reset the safety button (**A**) or (**B**).
- Machine / motor overheated. Switch off the machine at the main switch (**D**) and allow to cool down for approx. 30 minutes.
- Machine blocked.
- Blade is blunt.
  Eliminate the cause, and push the safety button (**A**).

- Backgauge blocked
  Safety button (**C**) ejects.
  Eliminate the cause, and push the safety button (**C**).

Safety button for:

A = Blade drive

B = Clamping drive

C = Backgauge drive

A

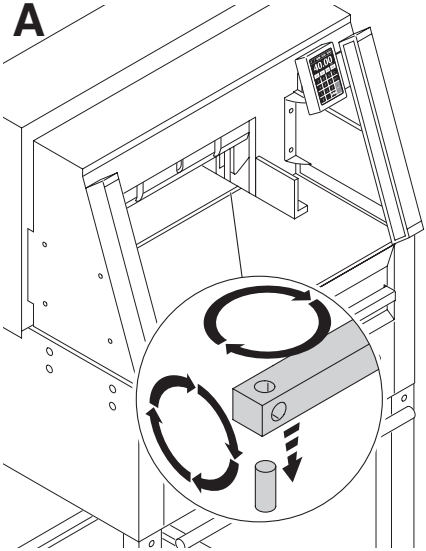

B

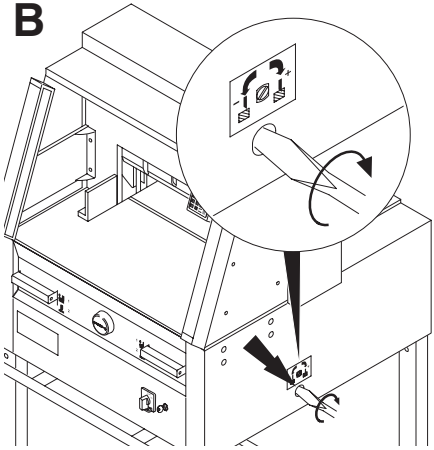

C

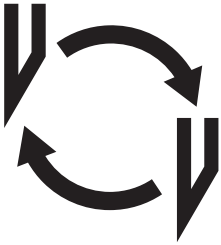

Does not cut through the last sheet:

- Turn or turn around the cutting stick (**A**), readjust the blade by means of the blade adjusting knob (**B**) (see page 38).

Poor cutting quality or blade stays in the paper stack.

- Change the blade (**C**) (see pages 30 - 38).

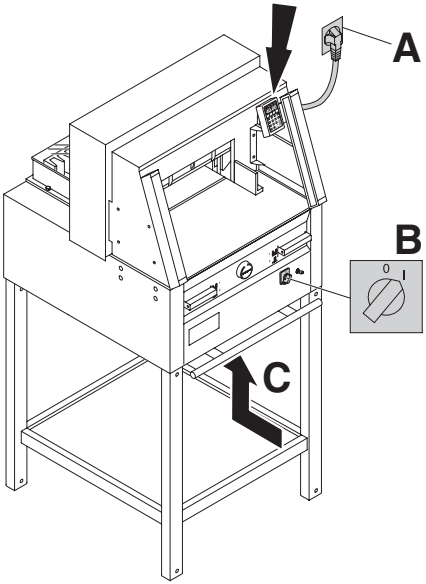

Display illumination off
- Machine is plugged in? (**A**)
- Main switch on position "I"? (**B**)
- Push in the safety button! (**C**)
- Check the units fuse and the on-site circuit breaker!

After 30 minutes the screen switches to energy-saving mode
The screen is reactivated by touching the keypad area ⑫.

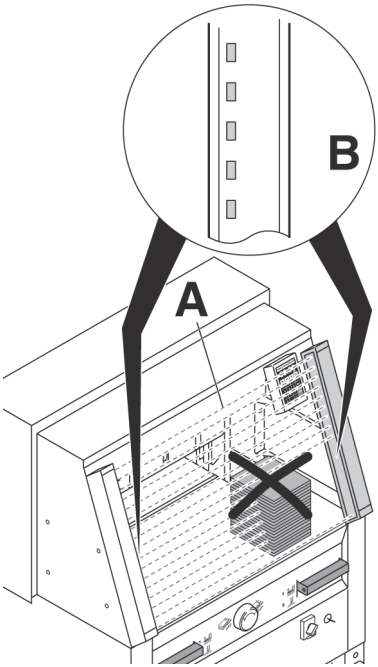

Trouble shooting-light beam
Cut cannot be activated:
- Remove all items obstructing the safety area (**A**)
- Transmitter and receiver both have a display (**B**)
  Green = o.k. / ready for operation
  Red = light beam is interrupted or error

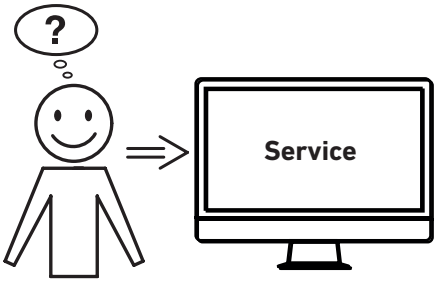

Motor runs but blade does not move downwards.

- Security brake has been activated! Inform the Service Team!

Did none of the specified solutions help you with your problem?

→ Contact: Service
- **www.krug-priester.com**
- **service@krug-priester.com**

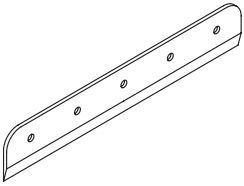

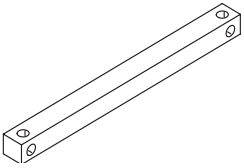

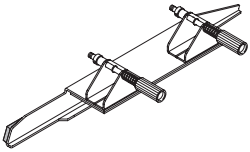

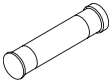

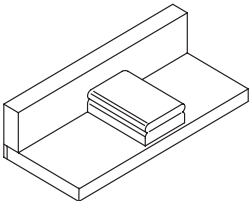

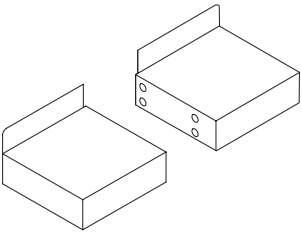

Recommended accessories:

Blade
- No. 9000 021 4860
- No. 9000 130 5260
- No. 9000 025 6660

HSS - Blade
- No. 9000 126 4860
- No. 9000 131 5260
- No. 9000 135 6660

Cutting stick (6 pieces)
- No. 9000 022 4860 (red)
- No. 9000 303 4860 (grey)
- No. 9000 024 5260 (red)
- No. 9000 305 5260 (grey)
- No. 9000 026 6660 (red)
- No. 9000 306 6660 (grey)

Blade changing tool [1]
- No. 9000 523 4860
- No. 9000 524 5260
- No. 9000 526 6660

Grease tube [1]
- No. 9000 625

Grease cartridge
- No. 9800 933

Brush
- No. 9001 828

Paper knock-up block [1]
- No. 9000 521

Side tables left and right
- No. 9000 528

[1] Included in delivery

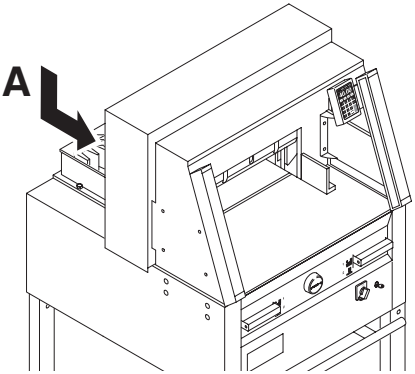

Technical data:
- Power supply: 230V/50Hz/1~, 120V/60Hz/1~
- Cutting height: 80 mm
- Leakage current < 3,5mA
- Power cord gauge min. 1,5mm^2 (230V)
- Power cord gauge AWG 12 (20A) (120V)

The exact technical specifications can be found on the technical specifications sticker (**A**) on the machine. A wiring diagram is found in the electrical switch box.
To claim under guarantee, the machine must still carry its original identification label.

Safety light beam
- Total reaction time: 101 ms
- Resolution 25 mm/minimum distance: 290 mm

Ambient operating temperature 10°C - 60°C
Air humidity (not condensating) 15 % - 95 %

	Cutting-length mm	Table-depth mm	Minimum space requirement (W X D X H) mm	Weight kg
4860	475	450	762* x 992** x 1296	232***
5260	520	520	860* x 1126** x 1293	257***
6660	650	610	992* x 1220** x 1293	312***

* with side tables: (Width) 4860 1349 mm
** with side tables: (Depth) 4860 992 mm
* with side tables: (Width) 5260 1436 mm
** with side tables: (Depth) 5260 1126 mm
* with side tables: (Width) 6660 1565 mm
** with side tables: (Depth) 6660 1220 mm
*** with side tables: 4860, 241 kg
*** with side tables: 5260, 266 kg
*** with side tables: 6660, 321 kg

This machine is approved by independent safety laboratories and is in compliance with the EC-regulations 2006/42/EG and 2014/30/EG.

Sound level information:
Sound measurement to EN 13023 :
72,5 db (A)

Subject to alteration without notice.

The company Krug + Priester has the following certifications:

- Quality management system according to DIN EN ISO 9001
- Environmental management system according to DIN EN ISO 14001
- Energy management system according to DIN EN ISO 50001

EC-declaration of conformity

- Herewith we declare that

	GS-ID No.	UL-ID No.
4860	**11486001**	**10486001**
5260	**11526001**	**10522102**
6660	**11666001**	**10655002**

- complies with the following provisons applying to it

2006/42/EG:
EC Machinery directive

2014/30/EG:
EMV Electromagnetic compatibility directive

2011/65/EU, 2015/863/EU
RoHS directive

- Applied harmonised standards in particular

EN 60204-1; EN 1010-1; EN 1010-3; EN 55014-1; EN 55014-2;
EN 61000-3-2; EN 61000-3-3; EN ISO 12100; EN 61496-1; EN 61496-2;
EN ISO 13857; EN ISO 11204; EN 13023; EN ISO 13849-1;
BS EN 60204-1; BS EN 1010-1; BS EN 1010-3; BS EN 55014-1; BS EN 55014-2;
BS EN 61000-3-2; BS EN 61000-3-3; BS EN ISO 12100;
BS EN ISO 13857; BS EN ISO 11204; BS EN 13023; BS EN ISO 13849-1

11.02.2022
Date

Daniel Priester
- Managing Director -

Authorized representative for technical documentation

Krug & Priester GmbH & Co. KG
Simon-Schweitzer-Str. 34
D-72336 Balingen (Germany)

Remarks:

IDEAL

Made in Germany

Krug & Priester GmbH & Co. KG
Simon-Schweitzer-Str. 34
D-72336 Balingen (Germany)
www.krug-priester.com

IDEAL 4860-6660 EN 9700165 08-2022 20240621zm